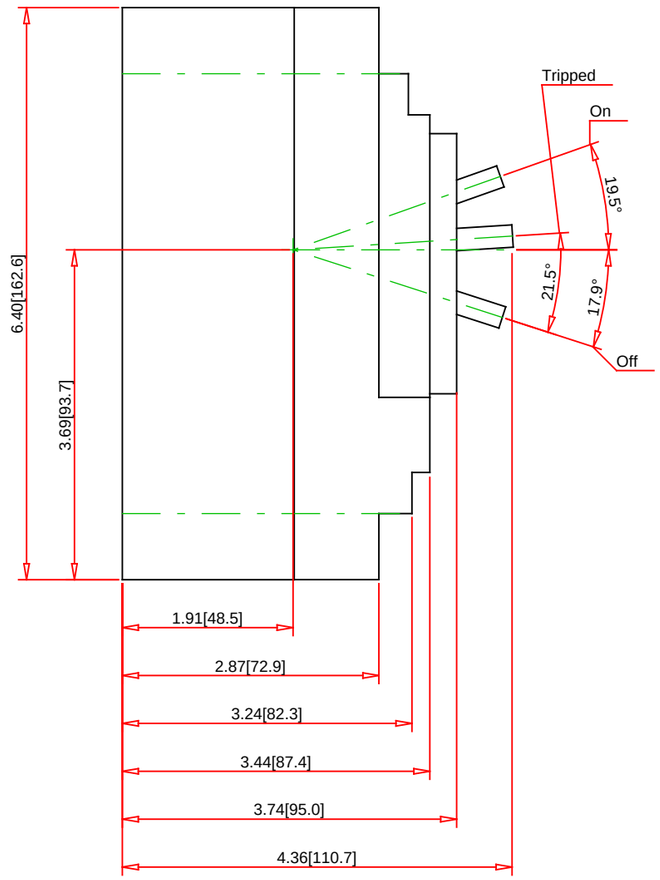

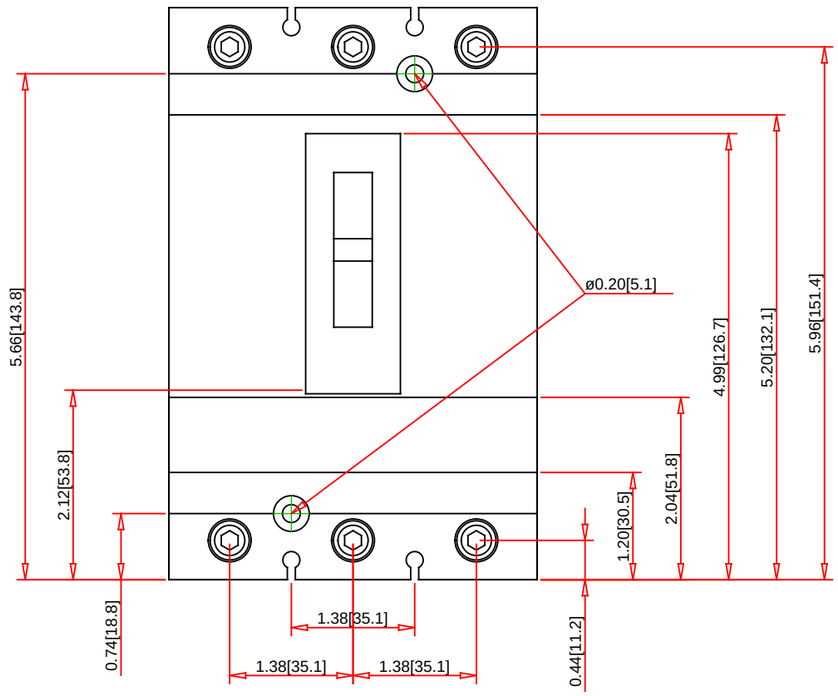

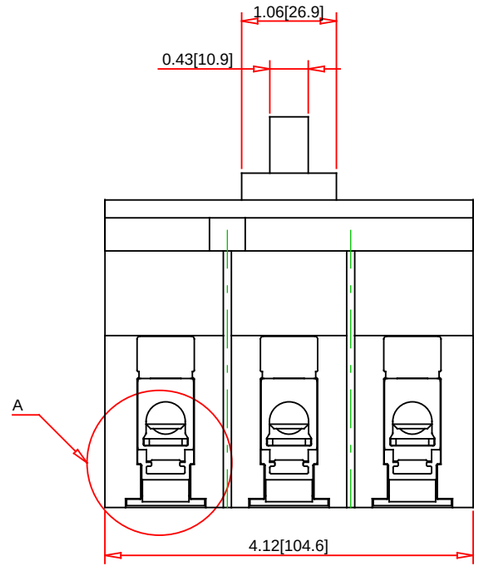

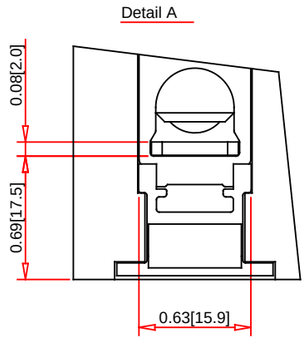

Note:
- Drawings Not To Scale
- Drawings Subject to Change Without Notice
- Dimensions are inches next to [Millimeters]

Part No.:

HDL36045

SQUARE D by Schneider Electric

Schneider Electric United States
North American Division
Boston One Campus
800 Federal Street
Andover, MA 01810, USA
Phone:+1 8773425173
Email: CCC@us.schneider-electric.com

Technical Information:

General Application:	Provides overload and short circuit protection
For Use With:	Industrial Enclosures and Switchboards
Approvals:	UL Listed - CSA Certified - IEC Rated
Mounting Type:	Unit Mount
Terminal Type:	Line: Lug - Load: Lug
Wire Size:	#14-3/0 AWG(Al/Cu)
Weight:	5 Pounds
Depth:	4.36 Inches
Height:	6.40 Inches
Width:	4.12 Inches

Specification:

Description:	PowerPact H-frame Thermal Magnetic Circuit Breaker
Number of Poles:	3-Pole
Ampere Rating:	45A
Voltage Rating:	600VAC/250VDC
Interrupting Rating:	25kA at 240VAC - 18kA at 480VAC - 14kA at 600VAC - 20kA at 250VDC
Circuit Breaker Rating:	80% Rated
Fixed AC Magnetic Trip:	Hold: 400A - Trip: 850A